Male Elbow

DLM-R

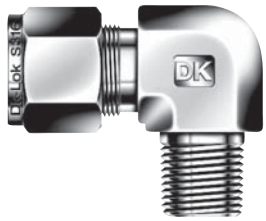

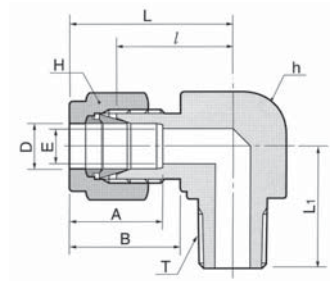

Connects fractional tube to female ISO tapered thread

Part No.	Tube O.D. D		T PT	E Min.	Width across flat				A	B	l	L	L1
					h		H						
	in.	mm			in.	mm	in.	mm					
DLM2-2R	1/8	3.17	1/8	2.28	1/2	12.70	7/16	11.11	12.70	15.24	18.30	24.91	18.90
DLM2-4R	1/8	3.17	1/4	2.28	1/2	12.70	7/16	11.11	12.70	15.24	18.30	24.91	23.26
DLM3-4R	3/16	4.76	1/4	3.04	1/2	12.70	1/2	12.70	13.71	16.00	18.79	25.40	23.36
DLM4-2R	1/4	6.35	1/8	4.82	1/2	12.70	9/16	14.28	15.24	17.78	19.55	26.47	18.79
DLM4-4R	1/4	6.35	1/4	4.82	1/2	12.70	9/16	14.28	15.24	17.78	19.81	27.18	23.87
DLM4-6R	1/4	6.35	3/8	4.82	11/16	17.46	9/16	14.28	15.24	17.78	22.35	29.71	26.20
DLM4-8R	1/4	6.35	1/2	4.82	13/16	20.64	9/16	14.28	15.24	17.78	24.60	31.97	33.02
DLM5-4R	5/16	7.93	1/4	6.35	9/16	14.28	5/8	15.87	16.25	18.54	21.33	29.77	24.50
DLM5-6R	5/16	7.93	3/8	6.35	11/16	17.46	5/8	15.87	16.25	18.54	23.11	30.48	26.20
DLM6-2R	3/8	9.52	1/8	4.82	5/8	15.87	11/16	17.46	16.76	19.30	23.11	30.48	20.60
DLM6-4R	3/8	9.52	1/4	7.11	5/8	15.87	11/16	17.46	16.76	19.30	23.11	30.48	25.40
DLM6-6R	3/8	9.52	3/8	7.11	11/16	17.46	11/16	17.46	16.76	19.30	23.87	31.24	26.20
DLM6-8R	3/8	9.52	1/2	7.11	13/16	20.64	11/16	17.46	16.76	19.30	25.90	31.42	33.02
DLM6-12R	3/8	9.52	3/4	7.11	1-1/16	26.98	11/16	17.46	16.76	19.30	29.71	37.08	36.83
DLM8-4R	1/2	12.70	1/4	7.11	13/16	20.64	7/8	22.22	22.86	21.84	25.90	36.06	28.30
DLM8-6R	1/2	12.70	3/8	9.65	13/16	20.64	7/8	22.22	22.86	21.84	25.90	36.06	28.30
DLM8-8R	1/2	12.70	1/2	10.41	13/16	20.64	7/8	22.22	22.86	21.84	25.90	36.06	33.02
DLM8-12R	1/2	12.70	3/4	10.41	1-1/16	26.98	7/8	22.22	22.86	21.84	29.71	39.87	36.83
DLM10-6R	5/8	15.87	3/8	9.65	15/16	23.81	1	25.40	24.38	21.84	28.00	37.06	30.22
DLM10-8R	5/8	15.87	1/2	11.93	15/16	23.81	1	25.40	24.38	21.84	28.00	37.06	35.10
DLM10-12R	5/8	15.87	3/4	12.70	1-1/16	26.98	1	25.40	24.38	21.84	29.71	39.87	36.83
DLM12-8R	3/4	19.05	1/2	11.93	1-1/16	26.98	1-1/8	28.57	24.38	21.84	29.71	39.87	37.00
DLM12-12R	3/4	19.05	3/4	15.74	1-1/16	26.98	1-1/8	28.57	24.38	21.84	29.71	39.87	36.83
DLM12-16R	3/4	19.05	1	16.0	1-3/8	34.92	1-1/8	28.57	24.38	21.84	34.54	44.59	46.48
DLM16-12R	1	25.40	3/4	15.74	1-3/8	34.92	1-1/2	38.10	31.24	26.41	36.83	49.02	42.20
DLM16-16R	1	25.40	1	22.35	1-3/8	34.92	1-1/2	38.10	31.24	26.41	36.83	49.02	46.70
DLM20-12R	1-1/4	31.75	3/4	15.74	1-11/16	42.86	1-7/8	47.63	41.14	38.86	44.50	66.54	42.95
DLM20-20R	1-1/4	31.75	1-1/4	27.68	1-11/16	42.86	1-7/8	47.63	41.14	38.86	44.50	66.54	47.75

Male Elbow

DLM-R

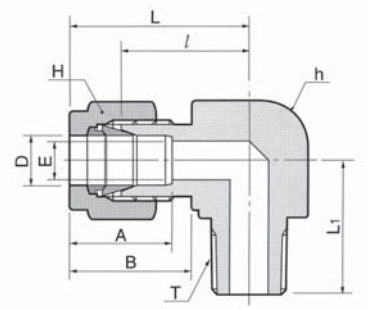

Connects metric tube to female ISO tapered thread

Part No.	Tube O.D. D	T PT	E Min.	Width across flat		A	B	l	L	L1
				h	H					
DLM3M-1R	3	1/16	2.4	11.1	12	12.9	15.3	17.0	23.6	17.8
DLM3M-2R	3	1/8	2.4	12.7	12	12.9	15.3	17.0	23.6	17.8
DLM3M-4R	3	1/4	2.4	12.7	12	12.9	15.3	18.0	24.6	23.4
DLM4M-2R	4	1/8	2.4	12.7	12	13.7	16.1	18.8	25.4	18.8
DLM4M-4R	4	1/4	2.4	12.7	12	13.7	16.1	18.8	25.4	23.4
DLM6M-2R	6	1/8	4.8	12.7	14	15.3	17.7	19.6	27.0	18.8
DLM6M-4R	6	1/4	4.8	12.7	14	15.3	17.7	19.6	27.0	23.4
DLM6M-6R	6	3/8	4.8	17.5	14	15.3	17.7	22.4	29.8	26.2
DLM6M-8R	6	1/2	4.8	20.6	14	15.3	17.7	24.4	31.8	33.0
DLM8M-2R	8	1/8	4.8	14.3	16	16.2	18.6	21.3	28.8	19.8
DLM8M-4R	8	1/4	6.4	14.3	16	16.2	18.6	21.3	28.8	24.4
DLM8M-6R	8	3/8	6.4	17.5	16	16.2	18.6	23.1	30.6	26.2
DLM8M-8R	8	1/2	6.4	20.6	16	16.2	18.6	25.1	32.6	33.0
DLM10M-2R	10	1/8	4.8	17.5	19	17.2	19.5	23.9	31.5	23.6
DLM10M-4R	10	1/4	7.1	17.5	19	17.2	19.5	23.9	31.5	26.2
DLM10M-6R	10	3/8	7.9	17.5	19	17.2	19.5	23.9	31.5	26.2
DLM10M-8R	10	1/2	7.9	20.6	19	17.2	19.5	25.9	33.5	33.0
DLM12M-2R	12	1/8	4.8	20.6	22	22.8	22.0	25.9	36.0	23.6
DLM12M-4R	12	1/4	7.1	20.6	22	22.8	22.0	25.9	36.0	28.2
DLM12M-6R	12	3/8	9.5	20.6	22	22.8	22.0	25.9	36.0	28.2
DLM12M-8R	12	1/2	9.5	20.6	22	22.8	22.0	25.9	36.0	33.0
DLM12M-12R	12	3/4	9.5	27.0	22	22.8	22.0	29.7	39.8	36.8
DLM14M-8R	14	1/2	11.1	23.81	25	24.4	22.0	27.9	38.0	30.2
DLM15M-6R	15	3/8	9.5	23.81	25	24.4	22.0	27.9	38.0	30.2
DLM15M-8R	15	1/2	11.9	23.81	25	24.4	22.0	27.9	38.0	35.1
DLM16M-6R	16	3/8	9.5	25.4	25	24.4	22.0	27.9	38.0	30.2
DLM16M-8R	16	1/2	11.9	23.81	25	24.4	22.0	27.9	38.0	35.1
DLM18M-8R	18	1/2	11.9	27.0	30	24.4	22.0	29.7	39.8	36.8
DLM18M-12R	18	3/4	15.1	27.0	30	24.4	22.0	29.7	39.8	36.8
DLM20M-8R	20	1/2	11.9	34.92	32	26.0	22.0	34.5	44.6	41.7
DLM20M-12R	20	3/4	15.9	34.92	32	26.0	22.0	34.5	44.6	41.7
DLM22M-8R	22	1/2	11.9	34.92	32	26.0	22.0	32.5	42.6	39.6
DLM22M-12R	22	3/4	15.9	34.92	32	26.0	22.0	34.5	44.6	41.7
DLM22M-16R	22	1	18.3	34.92	32	26.0	22.0	34.5	44.6	46.5
DLM25M-8R	25	1/2	11.9	34.92	38	31.3	26.5	36.8	49.1	41.7
DLM25M-12R	25	3/4	15.9	34.92	38	31.3	26.5	36.8	49.1	41.7
DLM25M-16R	25	1	21.8	34.92	38	31.3	26.5	36.8	49.1	46.5
DLM28M-16R	28	1	21.8	41.0	46	36.6	36.6	43.2	64.0	53.7

All dimensions are in millimeters unless otherwise specified and only for reference subject to change. DK-LOK Corporation