Male Connector for Bonded Gasket Seal
DMC-G

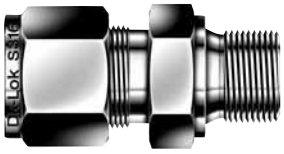

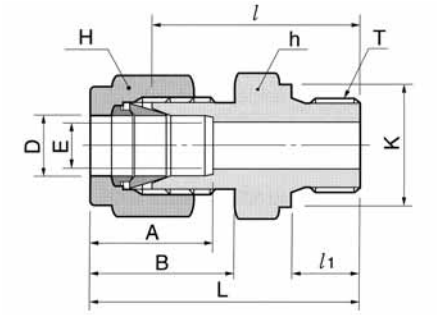

Connects fractional tube to female ISO parallel thread

Part No.	Tube O.D. D		T PF	E Min.	Width across flat h		Width across flat H		A	B	l	l1	L	K
	in	mm			in	mm	in	mm						
DMC2-2G	1/8	3.17	1/8	2.28	9/16	14.28	7/16	11.11	12.70	15.24	23.37	7.11	29.97	13.80
DMC2-4G	1/8	3.17	1/4	2.28	3/4	19.05	7/16	11.11	12.70	15.24	28.70	11.18	35.31	18.00
DMC2-6G	1/8	3.17	3/8	2.28	7/8	22.22	7/16	11.11	12.70	15.24	29.72	11.18	36.21	21.80
DMC4-2G	1/4	6.35	1/8	2.28	9/16	14.28	9/16	14.28	15.24	17.78	24.89	7.11	32.26	13.80
DMC4-4G	1/4	6.35	1/4	4.8	3/4	19.05	9/16	14.28	15.24	17.78	30.23	11.18	37.59	18.00
DMC4-6G	1/4	6.35	3/8	4.8	7/8	22.22	9/16	14.28	15.24	17.78	31.50	11.18	38.86	21.80
DMC4-8G	1/4	6.35	1/2	4.8	1-1/16	26.98	9/16	14.28	15.24	17.78	37.34	14.22	44.70	26.00
DMC6-2G	3/8	9.52	1/8	4.8	5/8	15.87	11/16	17.46	16.76	19.30	26.40	7.11	33.77	13.80
DMC6-4G	3/8	9.53	1/4	4.82	3/4	19.05	11/16	17.46	16.76	19.30	31.75	11.18	39.12	18.00
DMC6-6G	3/8	9.53	3/8	7.11	7/8	22.22	11/16	17.46	16.76	19.30	33.02	11.18	40.39	21.80
DMC6-8G	3/8	9.53	1/2	7.11	1-1/16	26.98	11/16	17.46	16.76	19.30	38.86	14.22	46.23	26.00
DMC8-4G	1/2	12.70	1/4	7.11	13/16	20.64	7/8	22.22	22.86	21.84	32.51	11.18	42.67	18.00
DMC8-6G	1/2	12.70	3/8	9.65	7/8	22.22	7/8	22.22	22.86	21.84	33.02	11.18	43.18	21.80
DMC8-8G	1/2	12.70	1/2	10.41	1-1/16	26.98	7/8	22.22	22.86	21.84	38.86	14.22	49.02	26.00
DMC12-8G	3/4	19.05	1/2	11.93	1-1/16	26.98	1-1/8	28.58	24.38	21.84	38.86	14.22	49.02	26.00
DMC12-12G	3/4	19.05	3/4	15.74	1-5/16	33.33	1-1/8	28.58	24.38	21.84	42.67	15.75	52.83	32.00
DMC16-8G	1	25.40	1/2	11.93	1-3/8	34.92	1-1/2	38.10	31.24	26.41	43.69	14.22	55.88	26.00
DMC16-12G	1	25.40	3/4	15.74	1-3/8	34.92	1-1/2	38.10	31.24	26.41	43.69	15.75	55.88	32.00
DMC16-16G	1	25.40	1	22.35	1-5/8	41.27	1-1/2	38.10	31.24	26.41	47.75	18.29	59.94	39.00
DMC20-20G	1-1/4	31.75	1-1/4	27.68	2	50.80	1-7/8	47.63	41.14	38.86	51.16	20.00	73.26	49.00
DMC24-24G	1-1/2	38.10	1-1/2	34.03	2-1/4	57.15	2-1/4	57.15	50.03	45.21	57.57	22.00	84.75	54.70

Male Connector for Metal Gasket (previously **DOM**)
DMC-GB

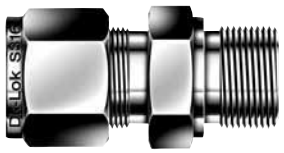

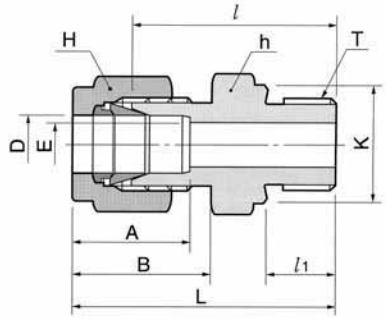

Connects fractional tube to female ISO parallel thread

Part No.	Tube O.D. D		T PF	E Min.	Width across flat h		Width across flat H		A	B	l	l1	L	K
	in	mm			in	mm	in	mm						
DMC 2-2GB	1/8	3.17	1/8	2.28	9/16	14.28	7/16	11.11	12.70	15.24	23.37	7.11	29.97	13.72
DMC 2-4GB	1/8	3.17	1/4	2.28	3/4	19.05	7/16	11.11	12.70	15.24	28.70	11.18	35.31	18.03
DMC 2-6GB	1/8	3.17	3/8	2.28	7/8	22.22	7/16	11.11	12.70	15.24	29.72	11.18	36.21	21.84
DMC 4-2GB	1/4	6.35	1/8	2.28	9/16	14.28	9/16	14.28	15.24	17.78	24.89	7.11	32.26	13.72
DMC 4-4GB	1/4	6.35	1/4	4.82	3/4	19.05	9/16	14.28	15.24	17.78	30.23	11.18	37.59	18.03
DMC 4-6GB	1/4	6.35	3/8	4.82	7/8	22.22	9/16	14.28	15.24	17.78	31.50	11.18	38.86	21.84
DMC 4-8GB	1/4	6.35	1/2	4.82	1-1/16	26.98	9/16	14.28	15.24	17.78	37.34	14.22	44.70	25.91
DMC 6-4GB	3/8	9.53	1/4	4.82	3/4	19.05	11/16	17.46	16.76	19.30	31.75	11.18	39.12	18.03
DMC 6-6GB	3/8	9.53	3/8	7.11	7/8	22.22	11/16	17.46	16.76	19.30	33.02	11.18	40.39	21.84
DMC 6-8GB	3/8	9.53	1/2	7.11	1-1/16	26.98	11/16	17.46	16.76	19.30	38.86	14.22	46.23	25.91
DMC 8-4GB	1/2	12.70	1/4	7.11	13/16	20.64	7/8	22.22	22.86	21.84	32.51	11.18	42.67	18.03
DMC 8-6GB	1/2	12.70	3/8	9.65	7/8	22.22	7/8	22.22	22.86	21.84	33.02	11.18	43.18	21.84
DMC 8-8GB	1/2	12.70	1/2	10.41	1-1/16	26.98	7/8	22.22	22.86	21.84	38.86	14.22	49.02	25.91
DMC 12-8GB	3/4	19.05	1/2	11.93	1-1/16	26.98	1-1/8	28.58	24.38	21.84	38.86	14.22	49.02	25.91
DMC 12-12GB	3/4	19.05	3/4	15.74	1-5/16	33.33	1-1/8	28.58	24.38	21.84	42.67	15.75	52.83	32.00
DMC 16-8GB	1	25.40	1/2	11.93	1-3/8	34.92	1-1/2	38.10	31.24	26.41	43.69	14.22	55.88	25.91
DMC 16-16GB	1	25.40	1	22.35	1-5/8	41.27	1-1/2	38.10	31.24	26.41	47.75	18.29	59.94	39.12
DMC 20-20GB	1-1/4	31.75	1-1/4	27.68	2	50.80	1-7/8	47.63	41.14	38.86	51.16	20.00	73.26	49.00
DMC 24-24GB	1-1/2	38.10	1-1/2	34.03	2-1/4	57.15	2-1/4	57.15	50.03	45.21	57.57	22.00	84.75	54.70

All dimensions are in millimeters unless otherwise specified and only for reference subject to change.

Male Connector for Metal Gasket
(previously **DOM**)

DMC-GB
DMC-G

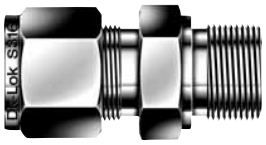

DMC-GB

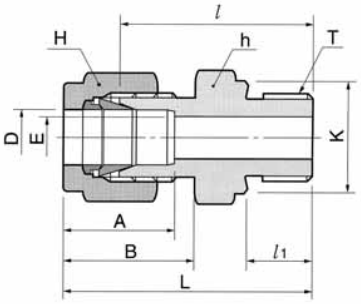

DMC-G

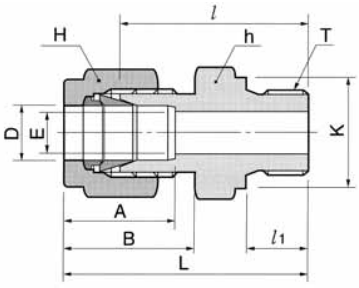

Connects metric tube to female ISO parallel thread

Part No.	Tube O.D. D	T PF	E Min.	Width across flat h	Width across flat H	A	B	l	l_1	L	K
DMC3M-2GB(-2G)	3	1/8	2.4	14	12	12.9	15.3	23.4	7.1	30.0	13.8
DMC3M-4GB(-4G)	3	1/4	2.4	19	12	12.9	15.3	28.7	11.2	35.3	18.0
DMC4M-2GB(-2G)	4	1/8	2.4	14	12	13.7	16.1	24.1	7.1	30.7	13.8
DMC6M-2GB(-2G)	6	1/8	4.0	14	14	15.3	17.7	24.9	7.1	32.3	13.8
DMC6M-4GB(-4G)	6	1/4	4.8	19	14	15.3	17.7	30.2	11.2	37.6	18.0
DMC6M-6GB(-6G)	6	3/8	4.8	22	14	15.3	17.7	31.5	11.2	38.9	21.8
DMC6M-8GB(-8G)	6	1/2	4.8	27	14	15.3	17.7	37.3	14.2	44.7	26.0
DMC8M-2GB(-2G)	8	1/8	4.0	15	16	16.2	18.6	25.7	7.1	33.2	13.8
DMC8M-4GB(-4G)	8	1/4	6.4	19	16	16.2	18.6	31.0	11.2	38.5	13.8
DMC8M-6GB(-6G)	8	3/8	6.4	22	16	16.2	18.6	32.3	11.2	39.8	21.8
DMC8M-8GB(-8G)	8	1/2	6.4	27	16	16.2	18.6	38.1	14.2	45.6	26.0
DMC10M-4GB(-4G)	10	1/4	5.9	19	19	17.2	19.5	31.8	11.2	39.4	18.0
DMC10M-6GB(-6G)	10	3/8	7.9	22	19	17.2	19.5	33.0	11.2	40.6	21.8
DMC10M-8GB(-8G)	10	1/2	7.9	27	19	17.2	19.5	38.9	14.2	46.5	26.0
DMC12M-4GB(-4G)	12	1/4	5.9	22	22	22.8	22.0	32.5	11.2	42.6	18.0
DMC12M-6GB(-6G)	12	3/8	7.9	22	22	22.8	22.0	33.0	11.2	43.1	21.8
DMC12M-8GB(-8G)	12	1/2	9.5	27	22	22.8	22.0	38.9	14.2	49.0	26.0
DMC12M-12GB(-12G)	12	3/4	9.5	35	22	22.8	22.0	42.7	15.7	52.8	32.0
DMC15M-8GB(-8G)	15	1/2	11.9	27	25	24.4	22.0	33.9	14.2	49.0	26.0
DMC16M-6GB(-6G)	16	3/8	7.9	24	25	24.4	22.0	33.8	11.2	43.9	21.8
DMC16M-8GB(-8G)	16	1/2	11.9	27	25	24.4	22.0	38.9	14.2	49.0	26.0
DMC18M-8GB(-8G)	18	1/2	11.9	27	30	24.4	22.0	38.9	14.2	49.0	26.0
DMC18M-12GB(-12G)	18	3/4	15.1	35	30	24.4	22.0	42.7	15.7	52.8	32.0
DMC20M-8GB(-8G)	20	1/2	11.9	30	32	26.0	22.0	40.4	14.2	50.5	26.0
DMC20M-12GB(-12G)	20	3/4	15.9	35	32	26.0	22.0	42.7	15.7	52.8	32.0
DMC22M-12GB(-12G)	22	3/4	15.9	35	32	26.0	22.0	42.7	15.7	52.8	32.0
DMC22M-16GB(-16G)	22	1	18.3	41	32	26.0	22.0	45.2	18.3	55.3	39.0
DMC25M-12GB(-12G)	25	3/4	15.9	35	38	31.3	26.5	45.2	15.7	57.5	32.0
DMC25M-16GB(-16G)	25	1	19.8	41	38	31.3	26.5	47.8	18.3	60.1	39.0
DMC28M-16GB(-16G)	28	1	19.8	41	46	36.6	36.6	49.3	18.3	70.1	39.0
DMC28M-20GB(-20G)	28	1-1/4	21.8	50	46	36.6	36.6	53.1	19.8	73.9	49.0
DMC30M-20GB(-20G)	30	1-1/4	21.8	50	46	36.6	36.6	53.1	19.8	73.9	49.0
DMC32M-20GB(-20G)	32	1-1/4	28.6	50	50	42.0	41.6	55.9	19.8	78.9	49.0
DMC38M-24GB(-24G)	38	1-1/2	31.8	55	60	49.4	47.9	61.7	20.6	89.3	54.7