Male Adapter
DAM-G

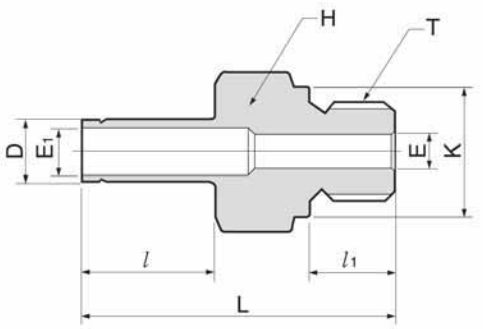

Connects fractional Dk-Lok *port to female ISO parallel thread*

Part No.	Tube O.D. D in	Tube O.D. D mm	T PF	E Min.	E_1	Width across flat h in	Width across flat h mm	l	l_1	L	K
DAM 2-2G	1/8	3.17	1/8	1.77	1.77	9/16	14.28	13.45	7.10	40.0	13.8
DAM 2-4G	1/8	3.17	1/4	6.4	1.77	3/4	19.05	13.45	11.2	35.8	18.0
DAM 4-2G	1/4	6.35	1/8	4.57	4.57	9/16	14.28	15.75	7.10	33.27	13.8
DAM 4-4G	1/4	6.35	1/4	4.57	4.57	3/4	19.05	15.75	11.2	38.1	18.0
DAM 6-4G	3/8	9.52	1/4	5.9	7.1	3/4	19.05	17.50	11.2	39.8	18.0
DAM 6-6G	3/8	9.52	3/8	7.11	7.11	7/8	22.22	17.5	11.2	40.64	21.8
DAM 8-4G	1/2	12.70	1/4	5.9	9.9	3/4	19.05	23.1	11.2	45.5	18.0
DAM 8-6G	1/2	12.70	3/8	7.9	9.9	7/8	22.22	23.1	11.2	46.2	21.8
DAM 8-8G	1/2	12.70	1/2	11.9	9.9	1-1/16	26.98	23.1	14.2	49.3	26.0
DAM 12-12G	3/4	19.05	3/4	14.98	14.98	1-5/16	33.33	24.7	15.7	54.86	32.0
DAM 16-16G	1	25.40	1	20.06	20.06	1-5/8	41.28	31.7	18.3	64.5	39.0

Connects metric Dk-Lok *port to female ISO parallel thread*

Part No.	Tube O.D. D	T PF	E Min.	E_1	Width across flat h	l	l_1	L	K
DAM 6M-2G	6	1/8	4.6	4.6	14	15.7	7.1	34.3	13.8
DAM 6M-4G	6	1/4	4.6	4.6	19	15.7	11.2	39.1	18.0
DAM 8M-4G	8	1/4	5.9	5.9	19	16.8	11.2	40.1	18.0
DAM 10M-4G	10	1/4	5.9	7.7	19	17.5	11.2	40.9	18.0
DAM 10M-6G	10	3/8	7.7	7.7	22	17.5	11.2	41.7	21.8
DAM 10M-8G	10	1/2	7.7	7.7	27	17.5	14.2	44.7	26.0
DAM 12M-4G	12	1/4	5.9	9.1	19	23.1	11.2	46.7	18.0
DAM 12M-6G	12	3/8	7.9	9.1	22	23.1	11.2	47.2	21.8
DAM 12M-8G	12	1/2	9.1	9.1	27	23.1	14.2	50.5	26.0
DAM 18M-8G	18	1/2	11.9	13.9	27	24.6	14.2	52.1	26.0
DAM 18M-12G	18	3/4	15.9	13.9	35	24.6	15.7	56.1	32.0
DAM 22M-12G	22	3/4	15.9	18.3	35	26.6	15.7	57.4	32.0
DAM 25M-16G	25	1	19.8	19.8	41	31.7	18.3	67.1	39.0
DAM 28M-16G	28	1	19.8	22.2	41	37.5	18.3	72.9	39.0
DAM 28M-20G	28	1-1/4	23.8	23.8	50	37.5	19.8	77.0	49.0
DAM 30M-20G	30	1-1/4	24.6	24.6	50	40.66	19.8	80.8	49.0
DAM 32M-20G	32	1-1/4	25.0	25.0	50	40.0	19.8	81.8	49.0
DAM 38M-24G	38	1-1/2	31.8	31.8	55	50.4	22.1	94.5	54.7